DTSU666-H 100 A and 250 A Smart Power Sensor

User Manual

Issue	05
Date	2021-10-10

HUAWEI TECHNOLOGIES CO., LTD.

Copyright © Huawei Technologies Co., Ltd. 2021. All rights reserved.

No part of this document may be reproduced or transmitted in any form or by any means without prior written consent of Huawei Technologies Co., Ltd.

Trademarks and Permissions

HUAWEI and other Huawei trademarks are trademarks of Huawei Technologies Co., Ltd.
All other trademarks and trade names mentioned in this document are the property of their respective holders.

Notice

The purchased products, services and features are stipulated by the contract made between Huawei and the customer. All or part of the products, services and features described in this document may not be within the purchase scope or the usage scope. Unless otherwise specified in the contract, all statements, information, and recommendations in this document are provided "AS IS" without warranties, guarantees or representations of any kind, either express or implied.

The information in this document is subject to change without notice. Every effort has been made in the preparation of this document to ensure accuracy of the contents, but all statements, information, and recommendations in this document do not constitute a warranty of any kind, express or implied.

Huawei Technologies Co., Ltd.

Address: Huawei Industrial Base
Bantian, Longgang
Shenzhen 518129
People's Republic of China

Website: https://e.huawei.com

About This Document

Purpose

This document describes the DTSU666-H (100 A/40 mA) and DTSU666-H 250 A/50 mA Smart Power Sensor in terms of its functions, electrical properties, and structure. DTSU666-H (100 A/40 mA) is abbreviated as DTSU666-H.

Figures provided in this document are for reference only.

Intended Audience

This document is intended for:

- Sales engineers
- Technical support engineers
- Maintenance engineers

Symbol Conventions

The symbols that may be found in this document are defined as follows.

Symbol	Description
DANGER	Indicates a hazard with a high level of risk which, if not avoided, will result in death or serious injury.
WARNING	Indicates a hazard with a medium level of risk which, if not avoided, could result in death or serious injury.
CAUTION	Indicates a hazard with a low level of risk which, if not avoided, could result in minor or moderate injury.

 Copyright © Huawei Technologies Co., Ltd.

Symbol	Description
NOTICE	Indicates a potentially hazardous situation which, if not avoided, could result in equipment damage, data loss, performance deterioration, or unanticipated results. NOTICE is used to address practices not related to personal injury.
NOTE	Supplements the important information in the main text. NOTE is used to address information not related to personal injury, equipment damage, and environment deterioration.

Change History

Changes between document issues are cumulative. The latest document issue contains all updates made in previous issues.

Issue 05 (2021-10-10)

- Updated **2.3 Application Scenarios**.
- Updated **4.4 Structure Specifications**.

Issue 04 (2021-03-01)

Updated **4.4 Structure Specifications**.

Issue 03 (2019-12-10)

- Updated **2.5 Product Structure**.
- Updated **4.4 Structure Specifications**
- Added **5 Current Transformer**.

Issue 02 (2019-08-30)

Added the DTSU666-H 250 A/50 mA Smart Power Sensor.

Issue 01 (2018-03-01)

This issue is the first official release.

 Copyright © Huawei Technologies Co., Ltd.

Contents

About This Document ii

1 Safety Precautions 1

2 Overview 4

2.1 Product Overview 4

2.2 Working Principles 5

2.2.1 Conceptual Diagram 5

2.2.2 Functions 6

2.3 Application Scenarios 9

2.4 Model Naming Conventions 10

2.5 Product Structure 11

3 System Maintenance 15

3.1 Troubleshooting 15

4 Technical Specifications 17

4.1 Environmental Specifications 17

4.2 Main Technical Performance and Parameters 17

4.3 EMC Specifications 19

4.4 Structure Specifications 20

5 Current Transformer 24

6 Acronyms and Abbreviations 28

 Copyright © Huawei Technologies Co., Ltd.

1 Safety Precautions

General Safety

- Follow the precautions and special safety instructions provided by Huawei when operating this product. Personnel who plan to install or maintain Huawei devices must receive a thorough training, understand all necessary safety precautions, and be able to correctly perform all operations. The manufacturer will not be liable for any consequences that are caused by the violation of general safety regulations and device usage safety standards.
- Before performing operations, read through this manual and follow all the precautions to prevent accidents. The "DANGER", "WARNING", "CAUTION", and "NOTICE" statements in this document do not represent all the safety instructions. They are only supplements to the safety instructions.
- Operation personnel should comply with local laws and regulations. The safety instructions in this document are only supplements to local laws and regulations.
- Do not operate the product or handle cables during thunderstorms.
- Before operating the product, remove any conductors such as jewelry or watches.
- Use insulated tools during operations.
- Follow specified procedures during installation and maintenance. Do not attempt to alter the device or deviate from the recommended installation procedures without prior consent from the manufacturer.
- Install the product in strict accordance with the quick guide.

Disclaimer

The manufacturer shall not be liable for any consequence caused by any of the following events:

- Transportation damage.
- The storage conditions do not meet the requirements specified in this document.
- Incorrect installation or use.
- Installation or use by unqualified personnel.

 Copyright © Huawei Technologies Co., Ltd.

- Failure to obey the operation instructions and safety precautions in this document.
- Operation in extreme environments which are not covered in this document.
- The DTSU666-H or DTSU666-H 250 A/50 mA operates beyond specified ranges.
- Unauthorized modifications to the product or software code or removal of the product.
- Device damage due to force majeure (such as lightning, fire, and storm).
- The warranty expires and the warranty service is not extended.
- Installation or use in environments which are not specified in related international standards.

Personnel Requirements

Only certified electricians are allowed to install, connect cables for, maintain, troubleshoot, and replace the DTSU666-H or DTSU666-H 250 A/50 mA.

- Operation personnel should receive professional training.
- Operation personnel should read through this document and follow all the precautions.
- Operation personnel should be familiar with the safety specifications about the electrical system.
- Operation personnel should understand the composition and working principles of the grid-tied PV power system and local regulations.
- Operation personnel must wear proper personal protective equipment (PPE).

Protect Labels

Do not scrawl or damage the nameplate on the back of the DTSU666-H or DTSU666-H 250 A/50 mA because it contains important product information.

Installation

- Ensure that the DTSU666-H or DTSU666-H 250 A/50 mA is not connected to a power supply or powered on before finishing installation.
- To allow proper heat dissipation and installation, maintain appropriate clearances between the DTSU666-H or DTSU666-H 250 A/50 mA and other objects.

Electrical Connections

DANGER

Before connecting cables, ensure that the DTSU666-H or DTSU666-H 250 A/50 mA is not damaged in any way. Otherwise, electric shocks or fire may occur.

- Ensure that all electrical connections comply with local electrical standards.

 Copyright © Huawei Technologies Co., Ltd.

- Ensure that the cables used in a grid-tied PV system are properly connected and insulated and meet all specification requirements.

Operation

DANGER

High voltage may cause an electric shock, which results in serious injury, death, or serious property damage from the DTSU666-H or DTSU666-H 250 A/50 mA in operation. Strictly comply with the safety precautions in this document and associated documents when operating the DTSU666-H or DTSU666-H 250 A/50 mA.

- Do not touch an energized DTSU666-H or DTSU666-H 250 A/50 mA because it may result in an electric shock.
- Follow local laws and regulations when operating the device.

Maintenance and Replacement

DANGER

High voltage may cause an electric shock, which results in serious injury, death, or serious property damage from the DTSU666-H or DTSU666-H 250 A/50 mA in operation. Therefore, before maintenance, power off the DTSU666-H or DTSU666-H 250 A/50 mA and strictly comply with the safety precautions in this document and associated documents to operate the DTSU666-H or DTSU666-H 250 A/50 mA.

- Maintain the DTSU666-H or DTSU666-H 250 A/50 mA with sufficient knowledge of this document and proper tools and testing devices.
- Temporary warning signs or fences must be placed to prevent unauthorized people from entering the site.
- The DTSU666-H or DTSU666-H 250 A/50 mA can be powered on only after all faults are rectified. Failing to do so may escalate faults or damage the device.
- During the maintenance, observe ESD precautions and wear ESD gloves.

 Copyright © Huawei Technologies Co., Ltd.

2 Overview

2.1 Product Overview

Type DTSU666-H and DTSU666-H 250 A/50 mA Smart Power Sensor (here in after referred to as the "sensor") adopts large-scaled integrated circuit with digital sampling technology, specially designed for power monitoring and energy metering demands including power system, communication industry, construction industry, mainly applied into real-time measurement and display for parameters such as three phase voltage, three phase current, active power, reactive power, frequency, positive and reverse energy, four quadrant electric energy, etc. Adopting the standard DIN35mm din rail mounting, structural module design, it is characterized with small volume, easy installation and networking, etc. As a monitoring terminal product towards energy management system, it can be widely applied into internal power assessment and monitoring of the industrial and mining enterprises, hotels, schools, large public buildings.

This performance index of the meter conforms to the following relevant technical standard:

- EN 61326-1:2013
- IEC 61326-1:2012
- EN 61326-2-1:2013
- IEC 61326-2-1:2012
- EN 61010-1:2010
- IEC 61010-1:2010
- EN 61010-2-1:2010
- IEC 61010-2-1:2010

 Copyright © Huawei Technologies Co., Ltd.

Figure 2-1 DTSU666-H or DTSU666-H 250 A/50 mA

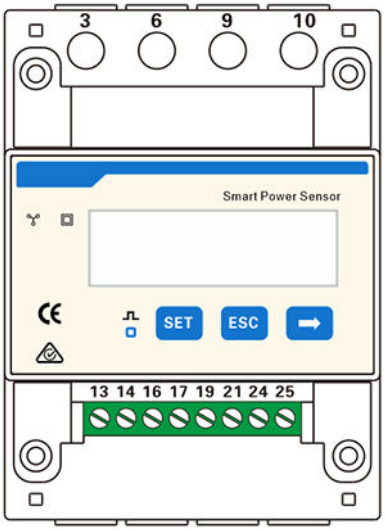

2.2 Working Principles

2.2.1 Conceptual Diagram

The instrument is composed of highly accurate metering integrated circuit (ASIC), management MCU, storage chip, RS485 communication module, etc. The conceptual diagram is shown in **Figure 2-2**.

Figure 2-2 Conceptual diagram

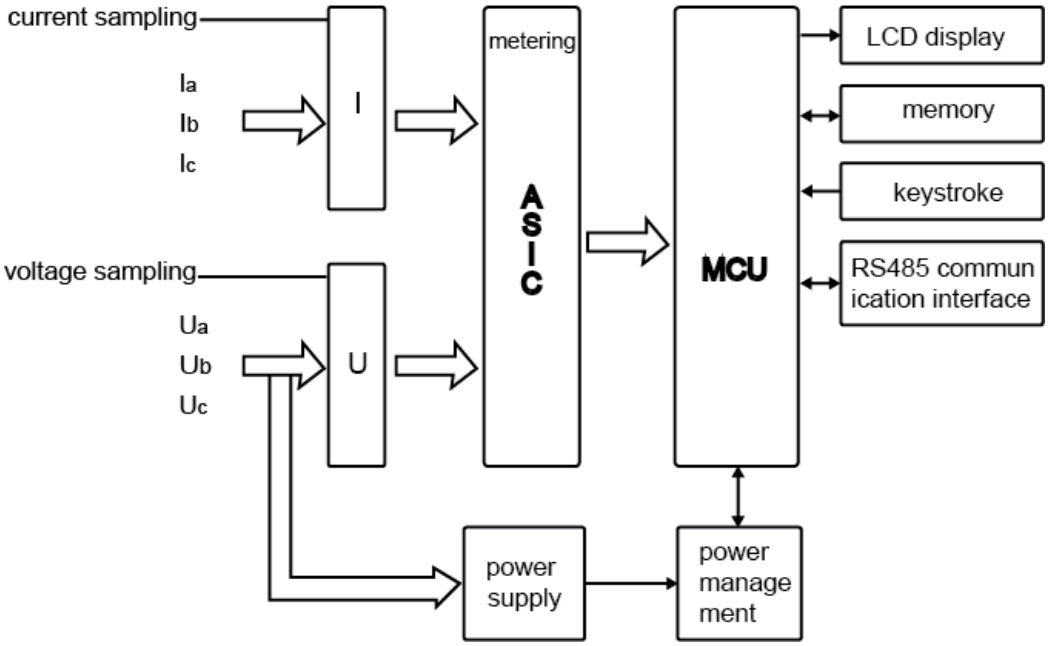

2.2.2 Functions

- Display function:

  The displayed interfacial electrical parameter and power data are both primary-side data (which is calculated based on the value of the current and voltage). The energy measurement value is displayed in seven bits, with the display range from 0.00kWh to 999999.9 kWh.

Figure 2-3 Liquid crystal display

Table 2-1 Display (auto loop)

No.	Display Interface	Instruction	No.	Display Interface	Instruction
1	Imp. 10000.00 kWh	Imp. active power = 10000.0 kWh	2	Exp. 2345.67 kWh	Exp. active energy = 2345.67 kWh
3	Pt 3.291 kW	Active power = 3.291 kW	4	UA 220.0 V	Phase A voltage = 220.0 V
5	Ub 220.1 V	Phase B voltage = 220.1 V	6	UC 220.2 V	Phase C voltage = 220.20 V
7	IA 5.000 A	Phase A current = 5.000 A	8	Ib 5.001 A	Phase B current = 5.001 A
9	IC 5.002 A	Phase C current = 5.002 A	10	F 50.00	Frequency freq= 50.00 Hz

NOTE

If no button is pressed for 60 seconds, the backlight turns off. Auto loop Switch time = 5s.

 Copyright © Huawei Technologies Co., Ltd.

Table 2-2 Display (change by key)

No.	Display Interface	Instruction	No.	Display Interface	Instruction
1	Σ 7654.33 kWh	Comb.active energy = 7654.33 kWh	2	Imp. 10000.00 kWh	Imp. active power = 10000.0 kWh
3	Exp. 2345.67 kWh	Exp. active energy = 2345.67 kWh	4	NO. n 1-9.600	None parity, 1 stop bit, baud = 9600 bps
5	NO. ----001	001 represents address	6	UA 220.0 V	Phase A voltage = 220.0 V
7	Ub 220.1 V	Phase B voltage = 220.1 V	8	UC 220.2 V	Phase C voltage = 220.20 V
9	I A 5.000 A	Phase A current = 5.000 A	10	I b 5.001 A	Phase B current = 5.001 A
11	I C 5.002 A	Phase C current = 5.002 A	12	Pt 3.291 kW	Active power = 3.291 kW
13	PA 1.090 kW	Phase A active power = 1.090 kW	14	Pb 1.101 kW	Phase B active power = 1.101 kW
15	PC 1.100 kW	Phase C active power = 1.100 kW	16	Ft 0.500	Power factor = 0.500 L
17	FA 1.000	Phase A power factor PFa = 1.000 L	18	Fb 0.500	Phase B power factor PFb = 0.500 L
19	FC-0.500	Phase C power factor PFc = 0.500 C	20	F 50.00	Frequency freq = 50.00 Hz

 Copyright © Huawei Technologies Co., Ltd.

NOTE

- Change by key "➡".
- Comb. active energy = Imp. active energy – Exp. active energy

- Programming function:

Table 2-3 Programming function

Parameter	Value Range	Description
Prot	1: 645 2: n.2 3: n.1 4: E.1 5: O.1	Settings for communication stop bit and parity bits: 1: factory mode 2: none parity, 2 stop bits, n.2 3: none parity, 1 stop bit, n.1 4: even parity, 1 stop bit, E.1 5: odd parity, 1 stop bit, O.1
bAud	0: 4.800 1: 9.600	Communication baud rate: 0: 4800 bps 1: 9600 bps
Addr	11-19	Communication address

- Programming operation:

NOTE

Communications parameters have been configured for the power meter before delivery. If the communication is abnormal, check and set the parameters.

Button description: **SET** represents **confirm** or **cursor shift** (when entering digits), **ESC** represents **exit**, and → represents **add**. The password is 701 by default.

Figure 2-4 Setting example for modifying communication address or baud rate

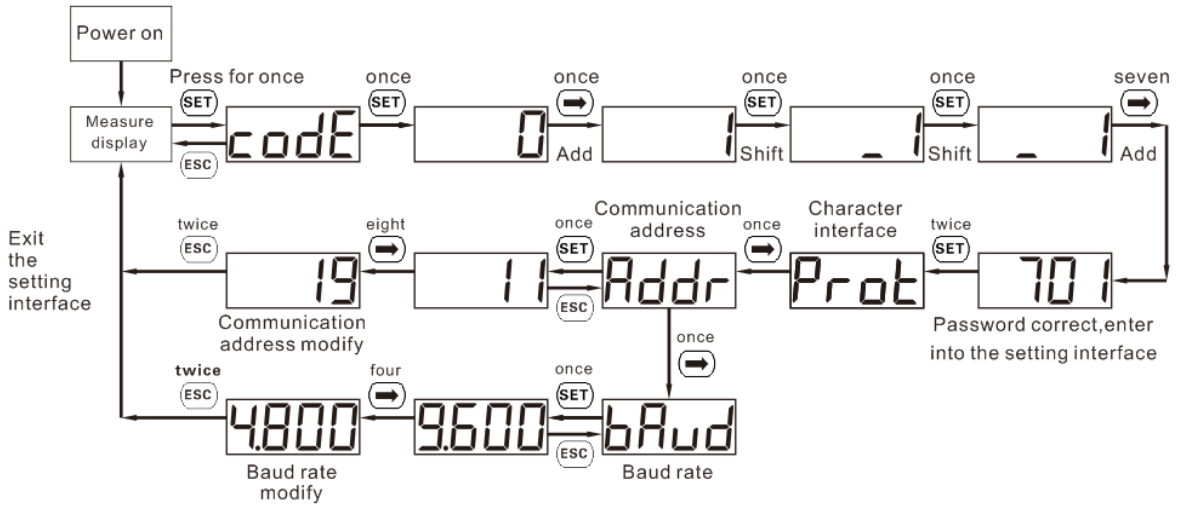

- Communication function

  The Sensor has an RS485 communication interface, the baud rate can be changed between 1200 bps, 2400 bps, 4800 bps and 9600 bps. The default Communication parameters is 9600 bps, none parity bits and 1 stop bit, and communication addresses (see factory numbers or LCD display), support ModBus RTU protocol.

2.3 Application Scenarios

Scenario 1: In the residential power station scenario (three-phase grid), sometimes according to the requirements of the grid, it is necessary to limit the active power of the grid-connected point. At this time, the smart power sensor needs to collect the power information of the grid-connected point to control the output power of the inverter. In the PV and storage scenario, the smart power sensor is required to control the battery charge and discharge. It adopts RS485 communication, which can realize the electrical quantity measurement and energy metering function, and respond to the upper host for the real-time data query.

Scenario 2: In commercial roof power plants, sometimes according to the requirements of the power grid, it is necessary to limit the active power of grid-connected points. At this time, the smart power sensor needs to collect the power information of the grid-connected point to control the output power of the inverter. It adopts RS485 communication, which can realize the electrical quantity measurement and energy metering function, and respond to the upper host for the real-time data query.

NOTE

The smart power sensor is mainly used for power control at the grid-connection point. The measured energy yield and electricity consumption are for reference only and cannot be used as a basis for calculating electricity fees. Electricity fee measurement is subject to the meter provided by the grid company.

Figure 2-5 Application Scenarios

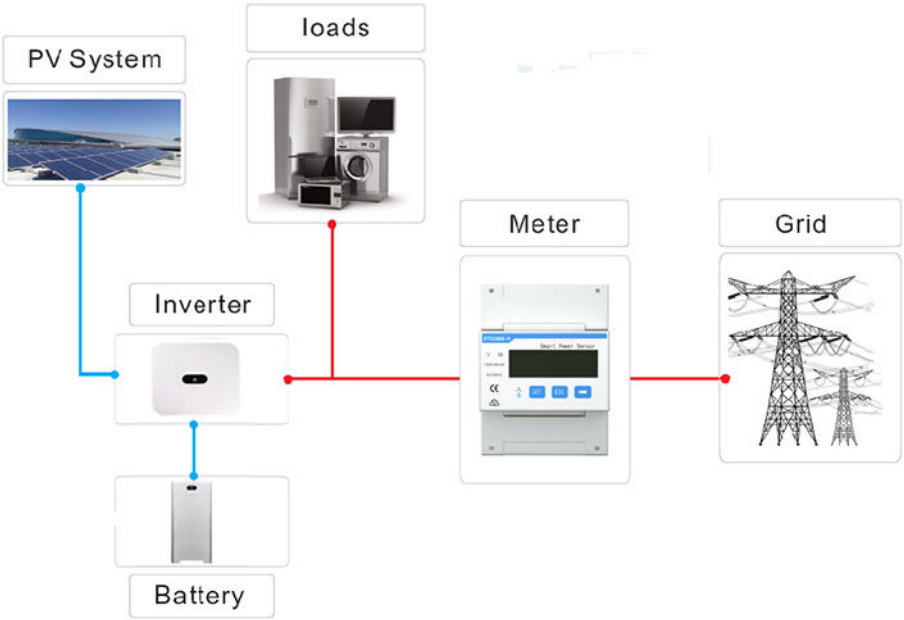

2.4 Model Naming Conventions

Figure 2-6 Model naming conventions

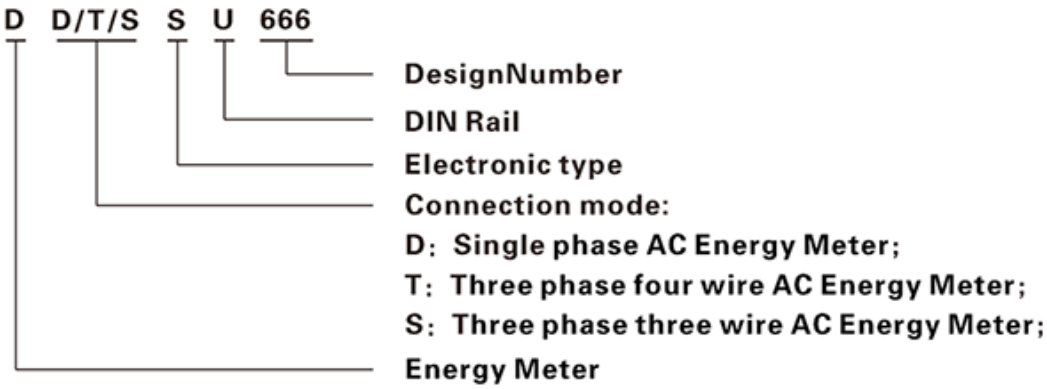

Table 2-4 Model specification

Model No.	Accuracy Grade	Referenced Voltage	Current Specification	Instrument Constant	Type
DTSU666-H	Active class 1	3 x 230/400 V	100 A/40 mA	400 imp/kWh	Via transformer
DTSU666-H 250A/50mA	Active class 1	3 x 230/400 V or 3 x 400 V	250 A/50 mA	400 imp/kWh	Via transformer

NOTE

Please take the physical label as standard.

2.5 Product Structure

Table 2-5 Product Structure

Model No.	Module	Outline Dimension (H x W x D) mm	Installation Dimension (Din-rail)	CT
DTSU666-H	4	72 x 100 x 65.5	DIN35 standard din-rail	with three 100 A/40 mA CT
DTSU666-H 250 A/50 mA	4	72 x 100 x 65.5	DIN35 standard din-rail	with three 200 A/50 mA CT

Figure 2-7 Product dimensions (Smart Power Sensor)

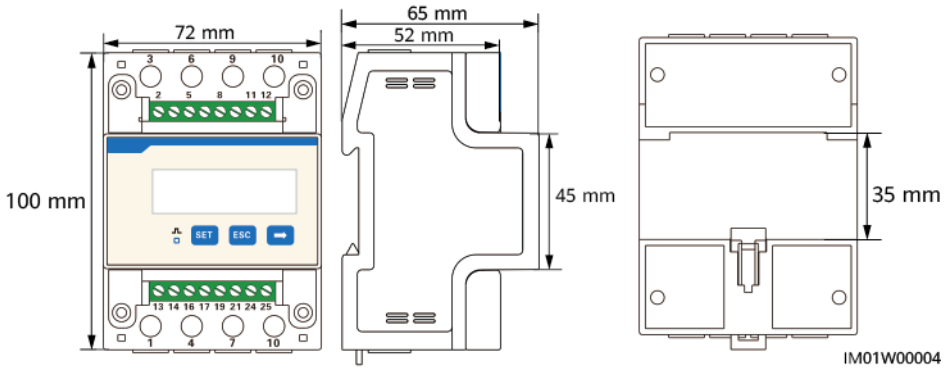

Figure 2-8 100 A CT dimensions

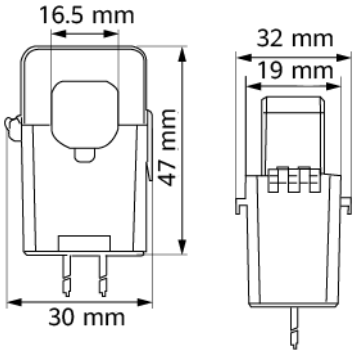

Figure 2-9 250 A CT dimensions

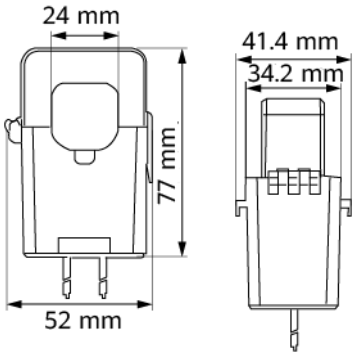

Appearance

Differences between DTSU666-H and DTSU666-H 250 A/50 mA:

- Parameters on the panel

Figure 2-10 DTSU666-H

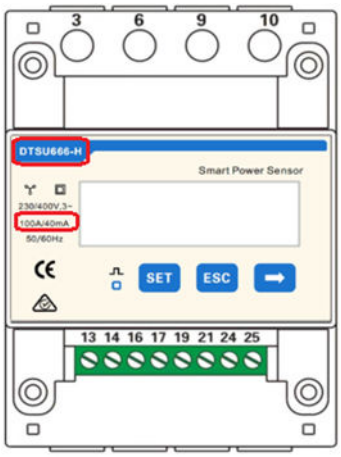

Figure 2-11 DTSU666-H 250 A/50 mA

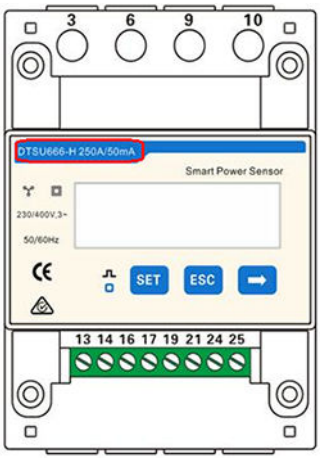

- Nameplate

Figure 2-12 DTSU666-H

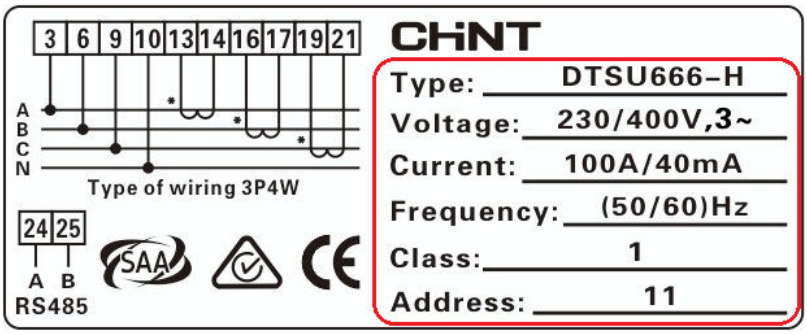

Figure 2-13 DTSU666-H 250 A/50 mA

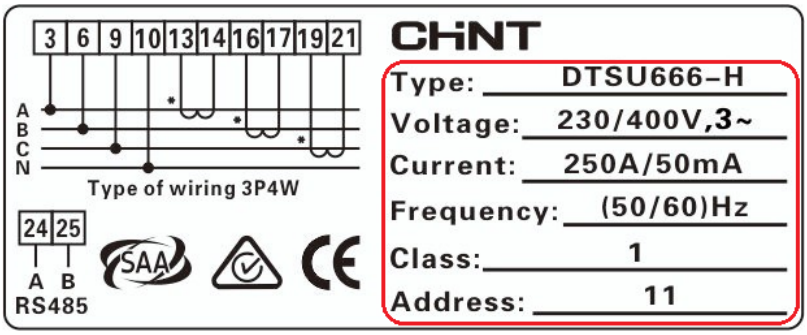

Performance and Specifications

Table 2-6 Performance and specifications

Category	DTSU666-H	DTSU666-H 250 A/50 mA
Nominal voltage	230 V AC / 400 V AC	230 V AC / 400 V AC
Measurement range	0–100 A	0–250 A
Power grid system	3P4W	3P4W or 3P3W

 Copyright © Huawei Technologies Co., Ltd.

3 System Maintenance

3.1 Troubleshooting

Table 3-1 Common alarms and troubleshooting measures

Fault Phenomenon	Factor Analysis	Troubleshooting
No display after the instrument being powered on	1. Incorrect wiring mode. 2. Abnormal voltage supplied for the instrument.	1. If the wiring mode is incorrect, please connect based on the correct wiring mode (see **4.4 Structure Specifications**). 2. If the supplied voltage is abnormal, please supply the voltage on the instrument specification.
Abnormal RS485 communication	1. The RS485 communication cable is disconnected, short circuit or reversely connected. 2. The address, baud rate, data bit and parity bit of the instrument is not in accordance with the inverter.	1. If any problems for the communication cable, please change the cable. 2. Set the address, baud rate, data bit and parity bit of the instrument to be the same as the inverter through buttons and so as the parameter setting.
Power metering inaccuracy	1. Wrong wiring, please check whether the corresponding phase sequence of voltage and current is correct. 2. Check whether the high and low ends of the current transformer inlet are reversely connected. Pa, Pb, and Pc are abnormal if the values are negative.	1. For wrong wiring, please connect based on the correct wiring mode (see **4.4 Structure Specifications**). 2. If a negative value is displayed, change the cable connection mode of the current transformer to ensure that the high and low ends are connected properly.

 Copyright © Huawei Technologies Co., Ltd.

NOTE

Contact the installation vendor if all failure analysis procedures listed above are completed and the fault still exists.

4 Technical Specifications

4.1 Environmental Specifications

Table 4-1 Environmental specifications

Item	Specifications
Regulated working temperature range	-25°C to +60°C
Limited working temperature range	-40°C to +70°C
Relative humidity (annual average)	≤ 75% RH
Atmospheric pressure	86–106 kPa

4.2 Main Technical Performance and Parameters

Electrical Parameters

Table 4-2 Electrical parameters

Item	Specifications	
Regulated working voltage range	0.9–1.1 Un	
Extended working voltage range	0.7–1.3 Un	
Power consumption of voltage	≤ 1.5 W/6 VA	
Power consumption of current	Ib < 10 A	≤ 0.2 VA

 Copyright © Huawei Technologies Co., Ltd.

Item	Specifications	
	Ib ≥ 10 A	≤ 0.4 VA
Data storage time after power interruption	≥ 10 years	

Percentage Error

Table 4-3 Limited value of active percentage error of the energy meter on balanced load

Type	Current Range	Power Factor	Limited Value of Percentage Error Towards Various Grades of Instruments
Connect via current transformer	$0.01\ I_n \le I < 0.05\ I_n$	1	±1.5
	$0.05\ I_n \le I \le I_{max}$	1	±1.0
	$0.02\ I_n \le I < 0.1\ I_n$	0.5 L, 0.8 C	±1.5
	$0.1\ I_n \le I \le I_{max}$	0.5 L, 0.8 C	±1.0
Notes	I_n: secondary rated current of the current transformer L: inductive; C: capacitive		

Table 4-4 Limited value of active percentage error of the energy meter on unbalanced load

Type	Current Range	Power Factor	Limited Value of Percentage Error Towards Various Grades of Instruments
Connect via current transformer	$0.05\ I_n \le I \le I_{max}$	1	±2.0
	$0.1\ I_n \le I \le I_{max}$	0.5 L	±2.0
Notes	I_n: secondary rated current of the current transformer L: inductive; C: capacitive		

 Copyright © Huawei Technologies Co., Ltd.

Start

Under the power factor of 1.0 and 2‰ In, the instrument can be started with continuous metering (if it is multiple phase instrument, then it has balanced load). If the instrument is designed based on measurement for bi-directional energy, then it is suitable for each direction of energy.

Defluction

When applying voltage while the current circuit has no current, the test output of the instrument shall not produce a superfluous pulse. When testing, the current circuit shall be disconnected and the applied voltage of the voltage circuit shall be 115% of the referenced voltage.

The shortest testing time Δt:

$$\Delta t \geq \frac{600 \times 10^6}{k \cdot m \cdot U_n \cdot I_{max}} \text{ [min]}$$

For instrument of class 1:

From the formula: k represents energy meter constant (imp/kWh), m represents the testing component quantity, U_n represents the referenced voltage (V), I_{max} represents the large current (A).

Other Technical Parameters

Table 4-5 Other technical parameters

Scale Range	0-999999.9 kWh
Communication Protocol	Modbus-RTU

4.3 EMC Specifications

EMC performance of the meter conforms to the following relevant technical standard:

- IEC 61326-1:2012
- IEC 61326-2-1:2012
- EN 61326-1:2013
- EN 61326-2-1:2013
- EN 61000-3-2:2005/A2:2009
- EN 61000-3-3:2008

 Copyright © Huawei Technologies Co., Ltd.

4.4 Structure Specifications

Table 4-6 Structure specifications

Item	Specifications
Installation mode	Directly stuck the sensor on the din rail and finally install it on the power distribution box. 1. When installing, please firstly stuck one side of the card slot and then forcibly stuck it on the din rail. 2. When disassembling, please use a screwdriver to forcibly hold the flexible card and then take out the sensor.
Dimensions (H x W x D)	72 mm x100 mm x 65.5 mm (±0.5 mm)
Weight	≤ 0.8 kg

1. Install the smart power sensor on the standard din rail of DIN35mm.
2. Install the Smart Power Sensor to the standard din rail from the top to the bottom, and then push the instrument to the din rail from the bottom to the front part.

Figure 4-1 Install the smart power sensor

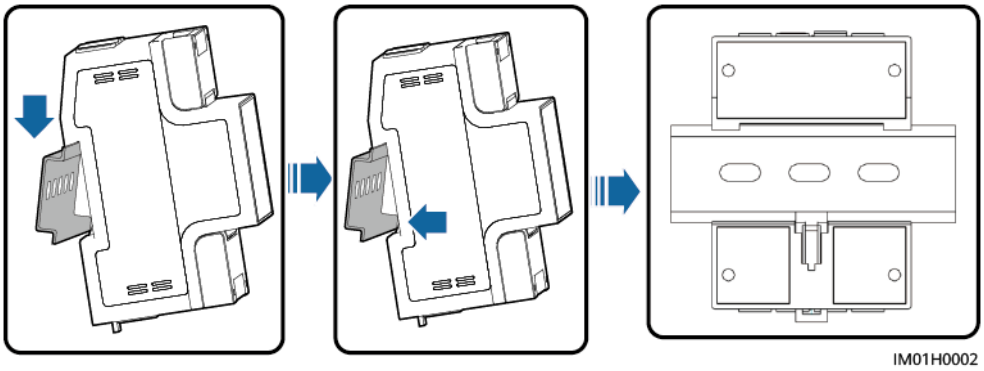

NOTE

A fuse and a thermistor are connected to each phase of Ua, Ub, and Uc inside the power meter to prevent damage caused by external short circuits. Ua, Ub, and Uc do not need to be protected by external fuses.

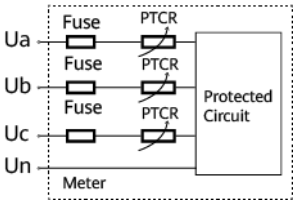

DTSU666-H or DTSU666-H 250 A/50 mA Wiring Terminal Instruction (Three-Phase Four-Wire)

Cable	DTSU666-H	Type	Conductor Cross-sectional Area Range	Outer Diameter	Source
AC power cable	Ua-3	Four-core outdoor copper cable	4-6 mm^2	10-21 mm	Prepared by the customer
	Ub-6				
	Uc-9				
	Un-10				
CT cable	IA*-13	-	-	-	Manufacturer
	IA-14	-	-	-	
	IB*-16	-	-	-	
	IB-17	-	-	-	
	IC*-19	-	-	-	
	IC-21	-	-	-	
Comm. cable	RS485A - 24	Two-core outdoor shielded twisted pair	0.20-1 mm^2	4-11 mm	Manufacturer
	RS485B - 25				

NOTE

- The minimum cable diameter must comply with local cable standards.
- The factors that affect cable selection include the rated current, cable type, routing mode, ambient temperature, and maximum expected line loss.

Operating voltage: 0.7–1.3 Un

1. Three phase four wire: Connect the Ua, Ub, Uc, Un voltage lines to the 3, 6, 9 and 10 terminals of the collector. Connect current transformer outlets IA*, IA, IB*, IB, IC*, IC to terminals 13, 14, 16, 17, 19, 21 of the collector.
2. Connect RS485A and RS485B to the communication host.

NOTE

- In the SmartLogger networking, the RS485A and RS485B need to connect to the SmartLogger. In the Smart Dongle networking, the RS485A and RS485B need to connect to the inverter.
- The CT direction must be consistent with the arrow direction as shown in the preceding figure.

 Copyright © Huawei Technologies Co., Ltd.

Figure 4-2 Three-phase four-wire (supported model: DTSU666-H or DTSU666-H 250 A/50 mA)

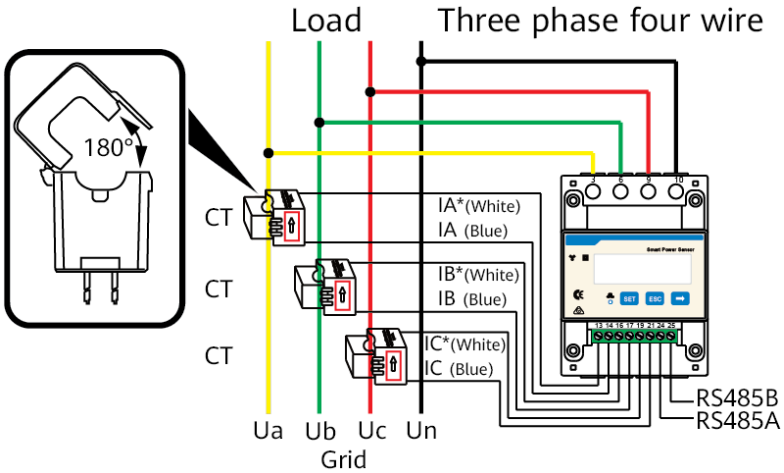

DTSU666-H 250 A/50 mA Wiring Terminal Instruction (Three-Phase Three-Wire)

Operating voltage: 0.7–1.3 Un

1. Three phase three wire: Connect the Ua, Uc, Ub voltage lines to the 3, 9 and 10 terminals of the collector. Connect current transformer outlets IA*, IA, IB*, IB, IC*, IC to terminals 13, 14, 16, 17, 19, 21 of the collector.
2. Connect RS485A and RS485B to the communication host.

NOTE

- In the SmartLogger networking, the RS485A and RS485B need to connect to the SmartLogger. In the Smart Dongle networking, the RS485A and RS485B need to connect to the inverter.
- The CT direction must be consistent with the arrow direction as shown in the preceding figure.

 Copyright © Huawei Technologies Co., Ltd.

Figure 4-3 Three-phase three-wire (supported model: DTSU666-H 250 A/50 mA)

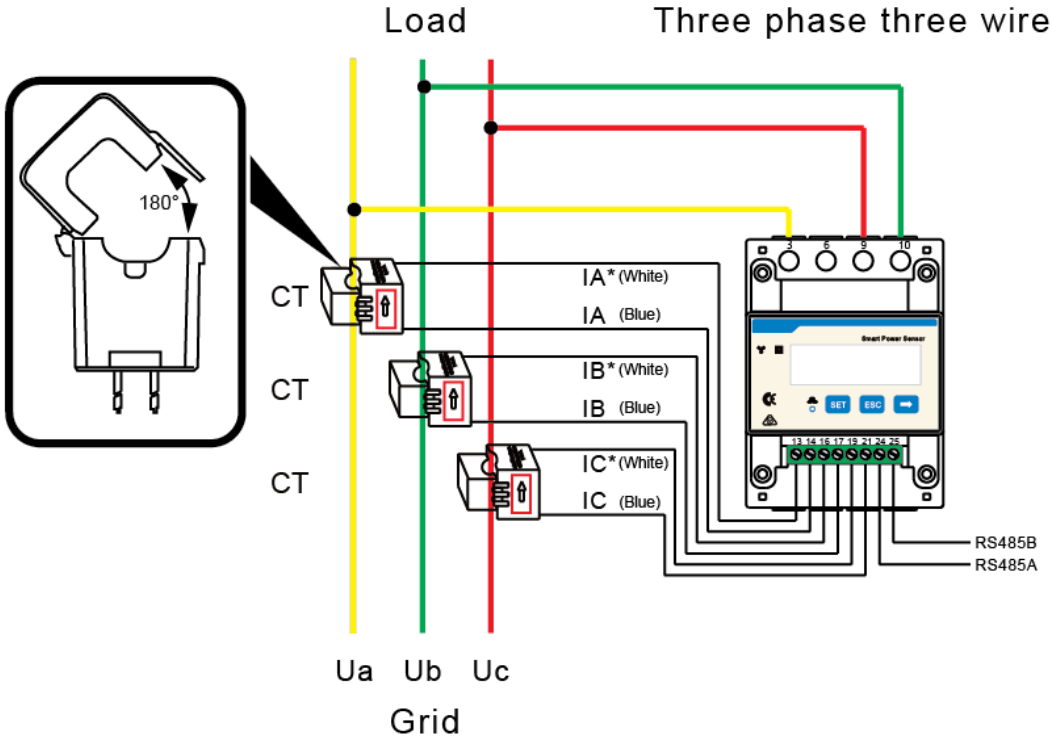

5 Current Transformer

Application

This product is suitable for 50 Hz multi-function electronic energy meter, anti-theft meter, digital display and other electrical measuring equipment.

This performance index of the current transformer conforms to the following relevant technical standard:

- JB/T 10665-2016
- JJG 313-2010

Environmental Specifications

Table 5-1 Environmental specifications

Item	Specifications
Operating temperature	-40°C to +70°C
Operating humidity	≤ 95% RH
Altitude	No more than 4000 m
Atmospheric conditions	No gas, steam, chemical deposits, grime and other corrosive or explosive media that seriously affect the insulation of the transformer

Electrical Parameters

Table 5-2 Electrical parameters

Item	Specifications
Line Frequency	50/60 Hz

 Copyright © Huawei Technologies Co., Ltd.

Item	Specifications
Rated Primary Current I_{pr}	• 100 A • 250 A
Rated transformation ratio N	• 100 A, 2500 : 1 • 250 A, 5000 : 1
Rated Load R_b	20 Ω
DC component and even harmonic	No
Accuracy	0.5
AC withstand voltage	Power frequency voltage between primary winding and secondary winding: 3 KV/min, no breakdown or arcing, Leakage current < 1 mA
Insulation Resistance	Between the primary winding and the secondary winding ≥ 500 MΩ/500 V DC

Electrical Circuit Diagram

Figure 5-1 Electrical Circuit Diagram

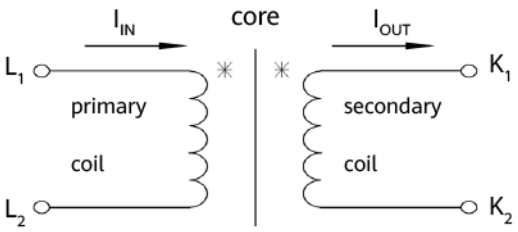

Product Size

The following figures show the CT structure of the DTSU666-H and DTSU666-H 250 A/50 mA meters.

Figure 5-2 CT structure of the DTSU666-H

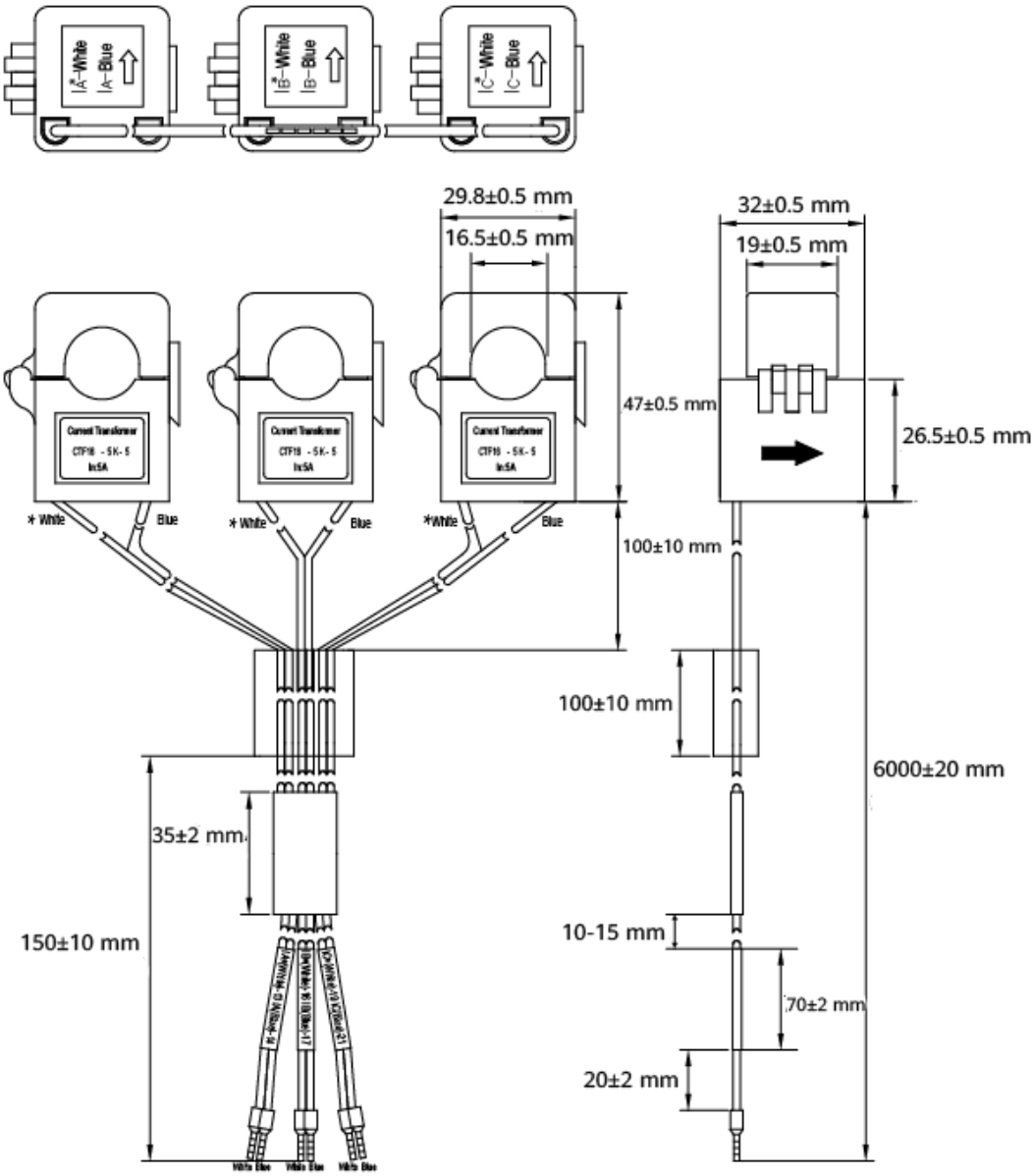

Figure 5-3 CT structure of the DTSU666-H 250 A/50 mA

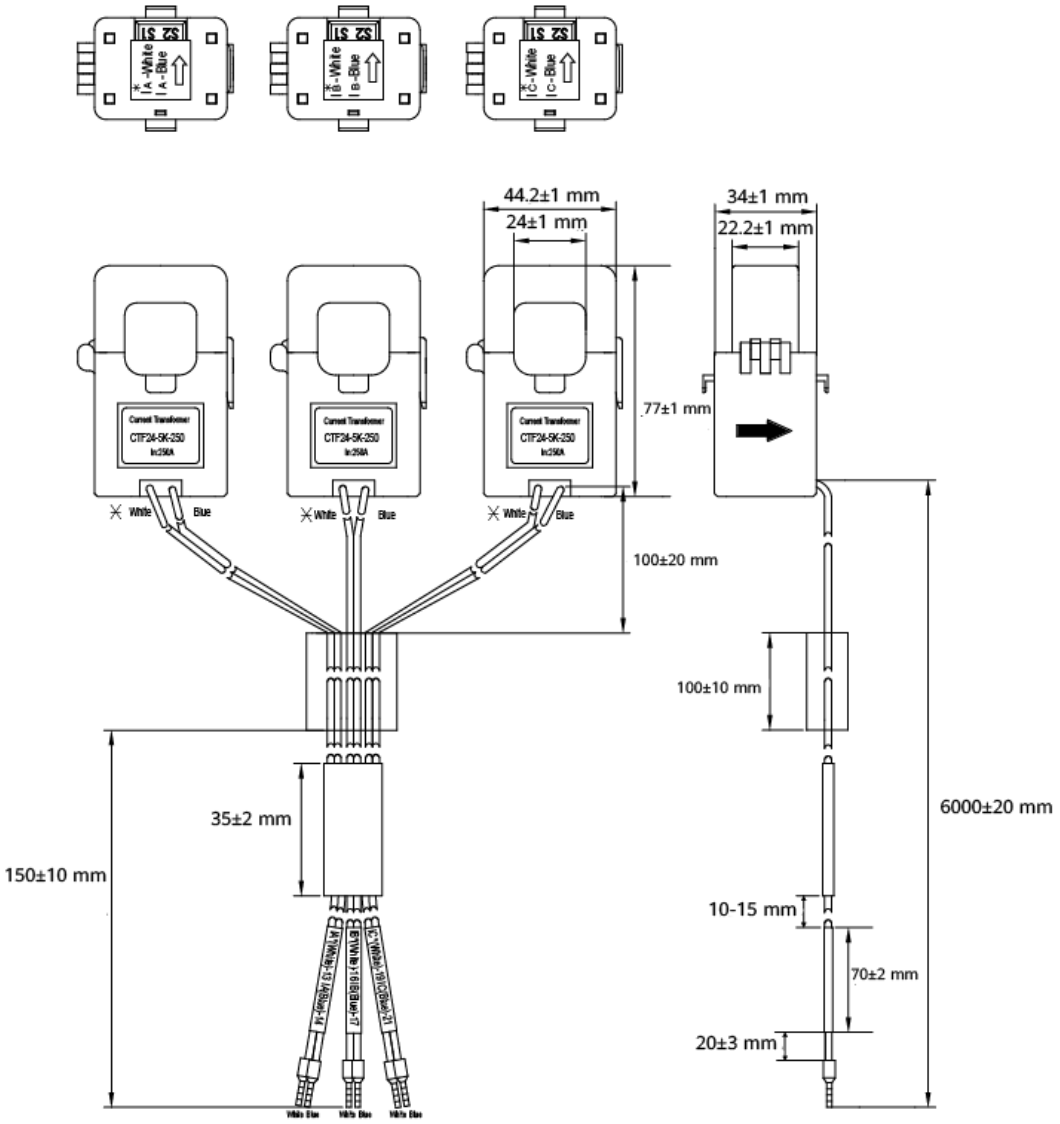

6 Acronyms and Abbreviations

D	
DC	direct current
E	
EFT	electrical fast transient
EMI	electromagnetic interference
EMS	electromagnetic susceptibility
ESD	electrostatic discharge
M	
MPPT	maximum power point tracking
R	
RE	radiated emission
RS	radiated susceptibility

 Copyright © Huawei Technologies Co., Ltd.